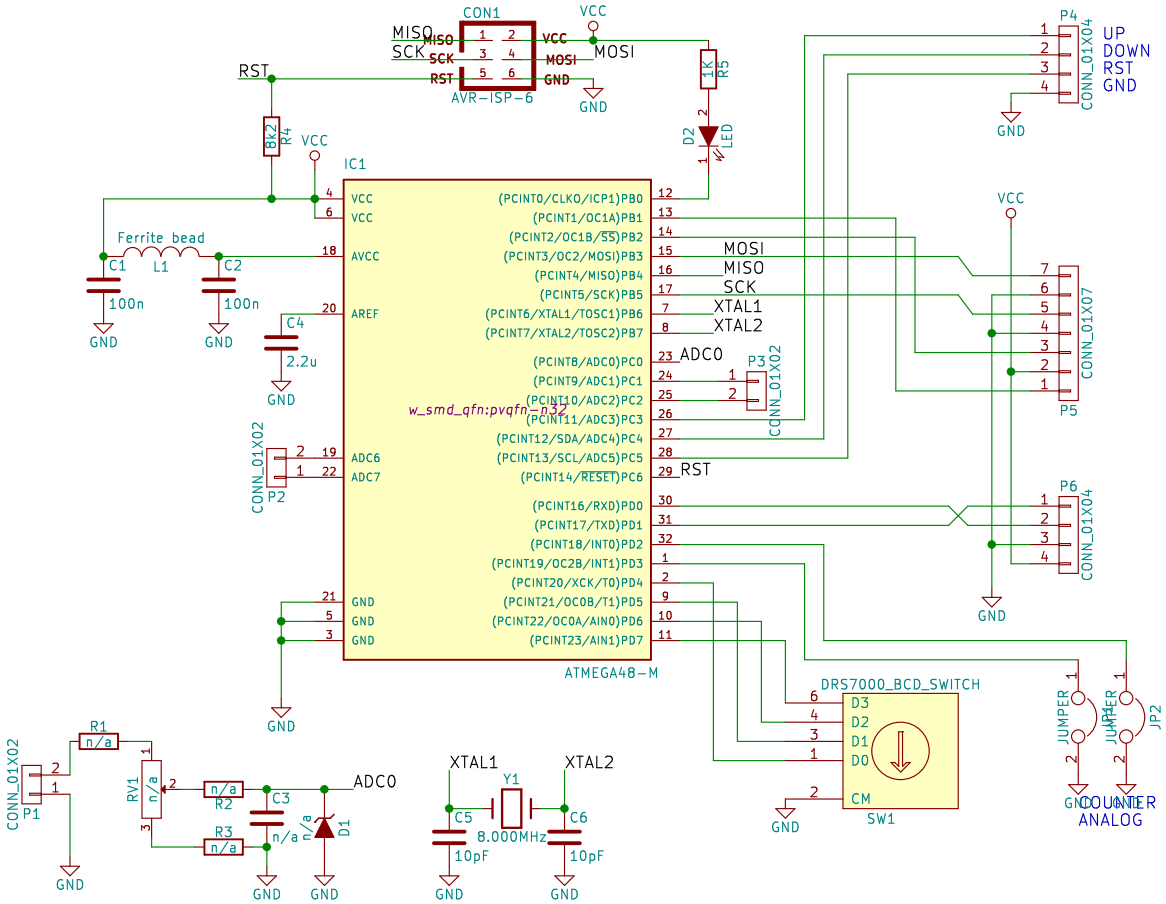
CON1
AVR-ISP-6
MISO
SCK
RST
VCC
MOSI
GND
R5
1K
D2
LED
R4
8K2
IC1
ATMEGA48-M
w_smd_qfn:pvqfn-n32
Ferrite bead
L1
C1
C2
100n
C4
2.2u
P2
CONN_01X02
P3
P4
CONN_01X04
UP
DOWN
P5
CONN_01X07
P6
DRS7000_BCD_SWITCH
SW1
JUMPER
JP1
JP2
COUNTER
ANALOG
R1
n/a
RV1
R2
R3
C3
D1
ADC0
P1
XTAL1
XTAL2
Y1
8.000MHz
C5
C6
10pF