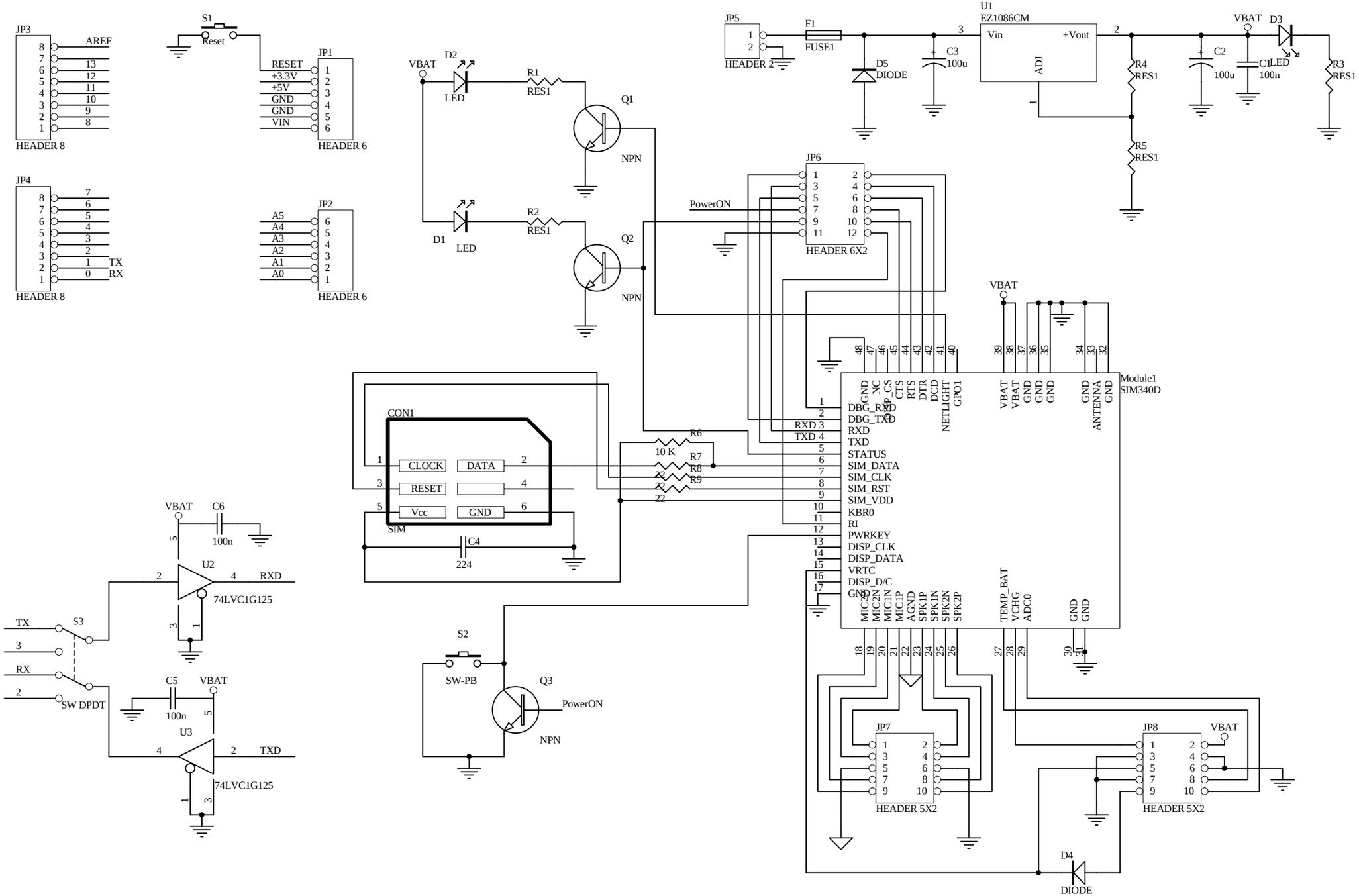
JP3
AREF
HEADER 8
S1
Reset
RESET
+3.3V
+5V
GND
GND
VIN
JP1
HEADER 6
JP4
TX
RX
HEADER 8
JP2
A5
A4
A3
A2
A1
A0
HEADER 6
VBAT
D2
LED
R1
RES1
Q1
NPN
D1
LED
R2
RES1
Q2
NPN
JP5
HEADER 2
F1
FUSE1
D5
DIODE
C3
100u
U1
EZ1086CM
Vin
+Vout
ADJ
R4
RES1
R5
RES1
C2
100u
C1
100n
D3
LED
R3
RES1
JP6
PowerON
HEADER 6X2
CON1
CLOCK
DATA
RESET
Vcc
GND
SIM
C4
224
R6
10 K
R7
R8
R9
22
22
22
C6
100n
U2
74LVC1G125
RXD
TX
S3
RX
SW DPDT
C5
100n
U3
74LVC1G125
TXD
S2
SW-PB
Q3
PowerON
NPN
Module1
SIM340D
GND
NC
P_CS
CTS
RTS
DTR
DCD
NETLIGHT
GPO1
VBAT
VBAT
GND
GND
GND
GND
ANTENNA
GND
DBG_RXD
DBG_TXD
RXD
TXD
STATUS
SIM_DATA
SIM_CLK
SIM_RST
SIM_VDD
KBR0
RI
PWRKEY
DISP_CLK
DISP_DATA
VRTC
DISP_D/C
GND
MIC2P
MIC2N
MIC1N
MIC1P
AGND
SPK1P
SPK1N
SPK2N
SPK2P
TEMP_BAT
VCHG
ADC0
GND
GND
JP7
HEADER 5X2
JP8
HEADER 5X2
D4
DIODE