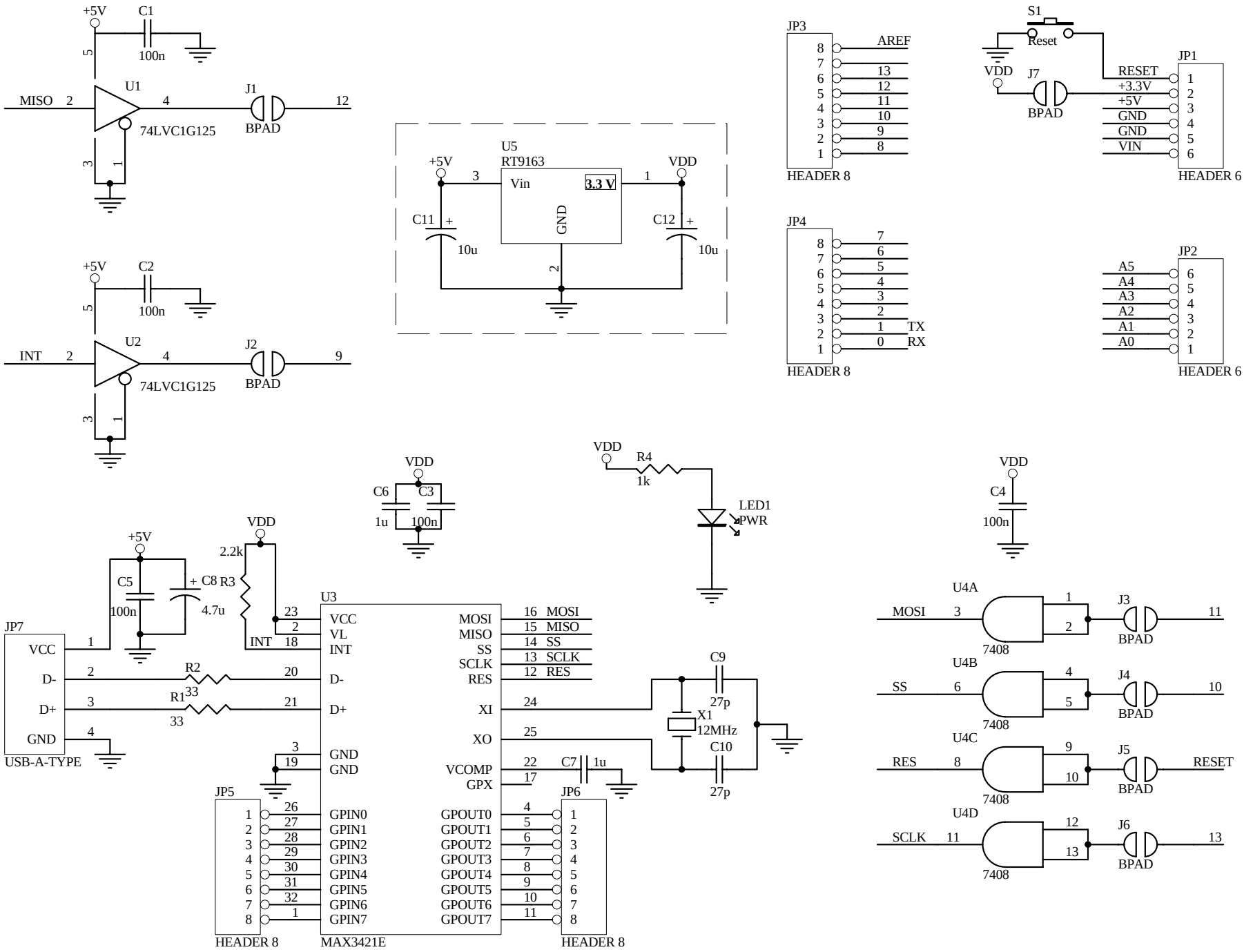
+5V
C1
100n
U1
MISO
J1
BPAD
12
74LVC1G125
+5V
C2
100n
U2
INT
J2
BPAD
9
74LVC1G125
U5
RT9163
+5V
Vin
3.3 V
GND
VDD
C11
10u
C12
10u
JP3
AREF
HEADER 8
JP4
TX
RX
HEADER 8
S1
Reset
VDD
J7
BPAD
JP1
RESET
+3.3V
+5V
GND
GND
VIN
HEADER 6
JP2
A5
A4
A3
A2
A1
A0
HEADER 6
VDD
C6
C3
1u
100n
VDD
R4
1k
LED1
PWR
VDD
C4
100n
+5V
C5
100n
C8
4.7u
VDD
2.2k
R3
JP7
VCC
D-
D+
GND
USB-A-TYPE
R2
33
R1
33
U3
VCC
VL
INT
D-
D+
GND
GND
GPIN0
GPIN1
GPIN2
GPIN3
GPIN4
GPIN5
GPIN6
GPIN7
MOSI
MISO
SS
SCLK
RES
XI
XO
VCOMP
GPX
GPOUT0
GPOUT1
GPOUT2
GPOUT3
GPOUT4
GPOUT5
GPOUT6
GPOUT7
MAX3421E
C9
27p
X1
12MHz
C10
27p
C7
1u
JP5
HEADER 8
JP6
HEADER 8
U4A
MOSI
7408
J3
BPAD
11
U4B
SS
7408
J4
BPAD
10
U4C
RES
7408
J5
BPAD
RESET
U4D
SCLK
7408
J6
BPAD
13