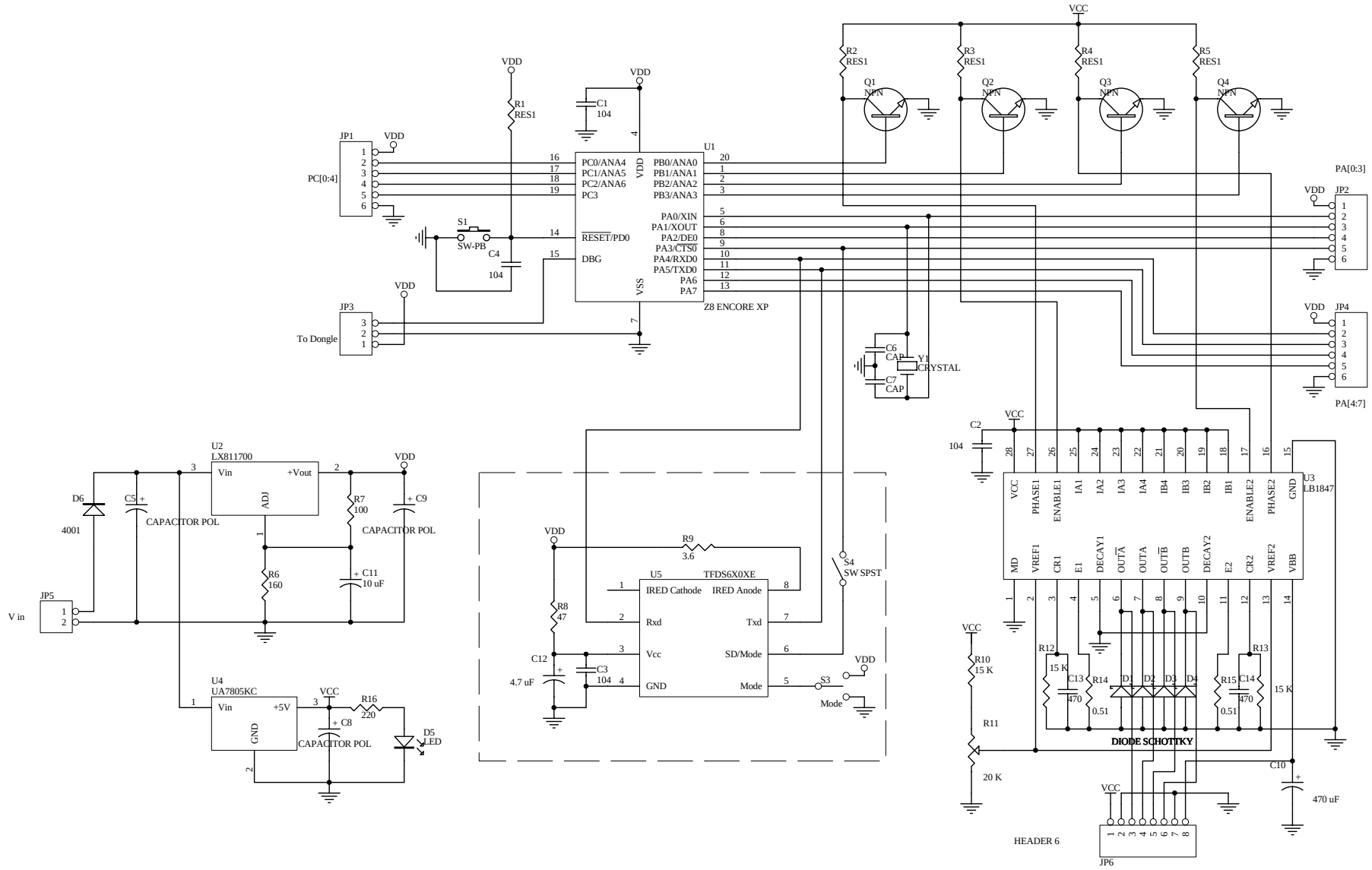

Title		
Size B	Number	Revision
Date: 19-Jan-2007	Sheet of	
File: D:\My Documents\My Designs\My Design.Dsn	Drawn By:	