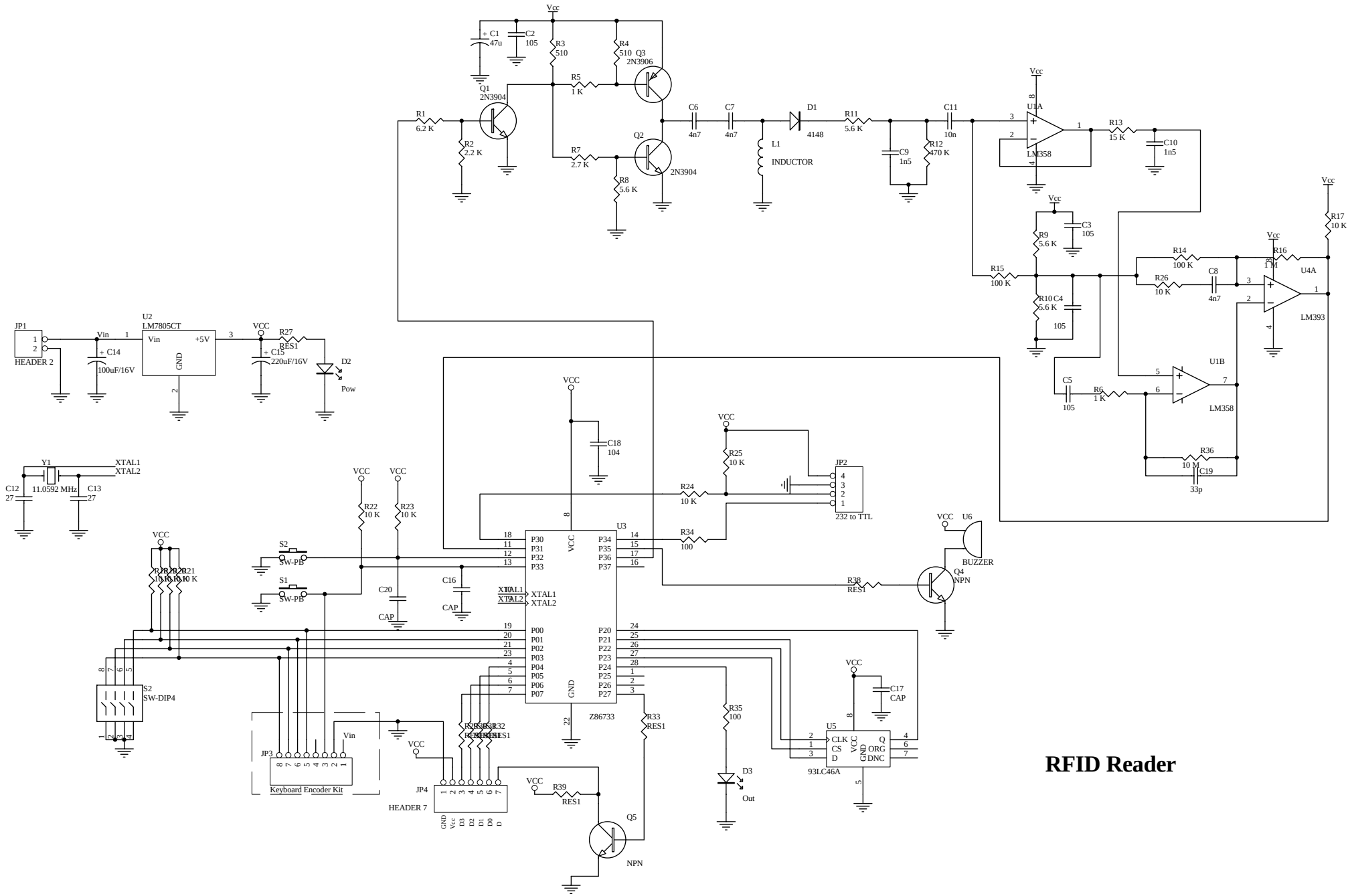
Vcc
C1 47u
C2 105
R3 510
R4 510
Q3 2N3906
Q1 2N3904
R5 1 K
R1 6.2 K
R2 2.2 K
R7 2.7 K
Q2 2N3904
R8 5.6 K
C6 4n7
C7 4n7
L1 INDUCTOR
D1 4148
R11 5.6 K
C9 1n5
R12 470 K
C11 10n
U1A LM358
R13 15 K
C10 1n5
R9 5.6 K
C3 105
R15 100 K
R10 5.6 K
C4 105
R14 100 K
R26 10 K
C8 4n7
R16 1 M
U4A LM393
R17 10 K
C5 105
R6 1 K
U1B LM358
R36 10 M
C19 33p
JP1 HEADER 2
U2 LM7805CT
Vin
+5V
GND
C14 100uF/16V
VCC
R27 RES1
C15 220uF/16V
D2 Pow
Y1 11.0592 MHz
XTAL1
XTAL2
C12 27
C13 27
C18 104
R25 10 K
JP2 232 to TTL
R24 10 K
R34 100
U3 Z86733
P30 P31 P32 P33 P34 P35 P36 P37
P00 P01 P02 P03 P04 P05 P06 P07
P20 P21 P22 P23 P24 P25 P26 P27
R22 10 K
R23 10 K
S2 SW-PB
S1 SW-PB
C20 CAP
C16 CAP
R38 RES1
Q4 NPN
U6 BUZZER
S2 SW-DIP4
JP3 Keyboard Encoder Kit
JP4 HEADER 7
GND Vcc D3 D2 D1 D0 D
R33 RES1
R35 100
D3 Out
R39 RES1
Q5 NPN
U5 93LC46A
CLK CS D Q ORG DNC
C17 CAP

RFID Reader