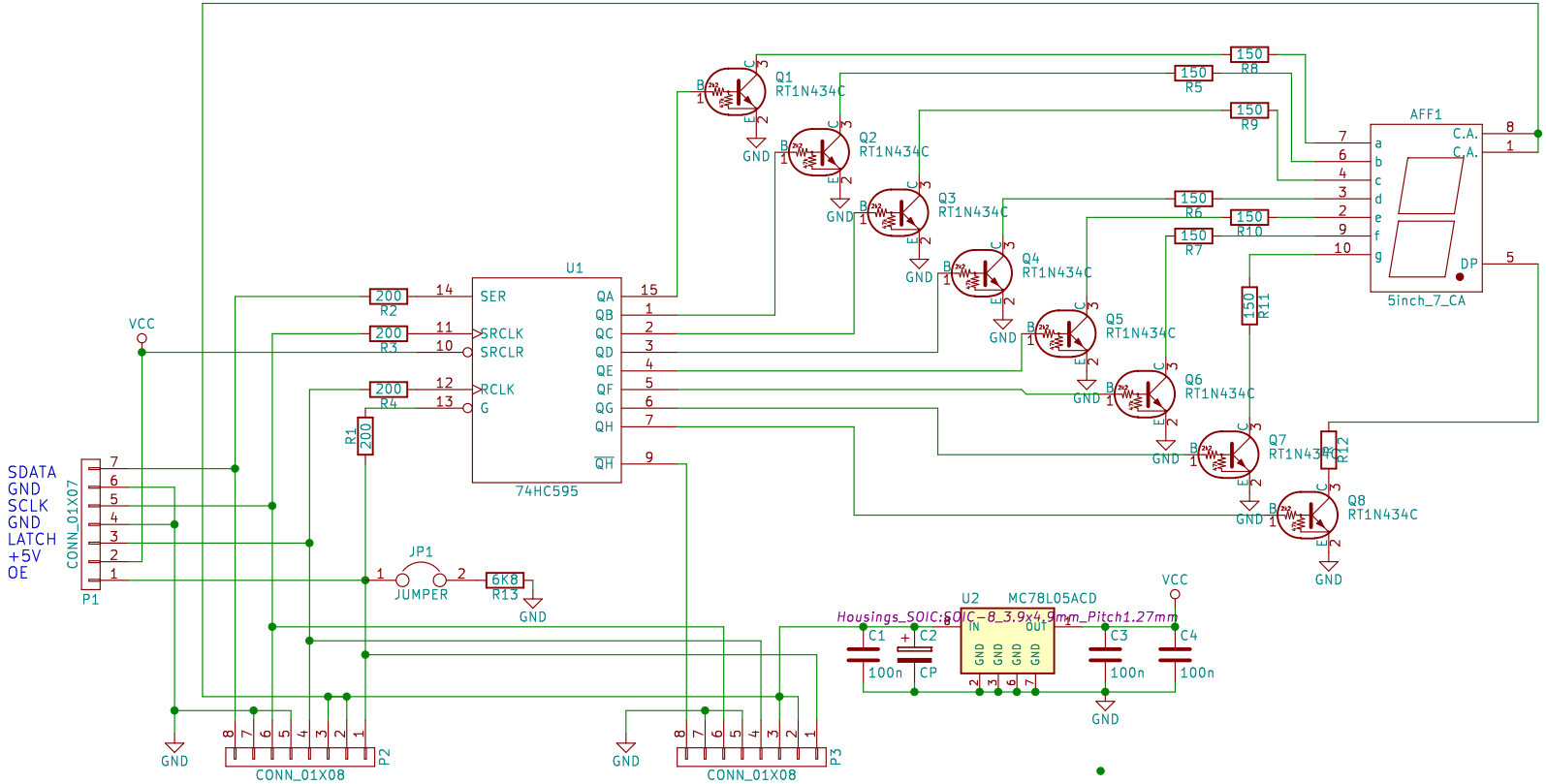
SDATA
GND
SCLK
GND
LATCH
+5V
OE
CONN_01X07
P1
VCC
U1
74HC595
SER
SRCLK
SRCLR
RCLK
G
QA
QB
QC
QD
QE
QF
QG
QH
QH
R1 200
R2 200
R3 200
R4 200
JP1
JUMPER
6K8
R13
GND
Q1 RT1N434C
Q2 RT1N434C
Q3 RT1N434C
Q4 RT1N434C
Q5 RT1N434C
Q6 RT1N434C
Q7 RT1N434C
Q8 RT1N434C
R5 150
R6 150
R7 150
R8 150
R9 150
R10 150
R11 150
R12 150
AFF1
5inch_7_CA
C.A.
C.A.
DP
U2
MC78L05ACD
Housings_SOIC:SOIC_8_3.9x4.9mm_Pitch1.27mm
IN
OUT
GND
C1 100n
C2 CP
C3 100n
C4 100n
P2
CONN_01X08
P3
CONN_01X08